

TECHNICAL DATASHEET

TOPLA TOP JIS TT95J

ORDER INFORMATION

TAB ID
1000330

Short Code
TT95J

DIN Marking
59518 SMF

EAN Code
3838807030527

Quantity per EU/CNT pallet
42/70 pcs

TECHNICAL INFORMATION

Voltage (V)
12

Capacity C20 (Ah)
95

CCA -18°C EN (A)
850

RC (min)
171

LxWxH (mm)
306x173x200/221

Total Weight (kg)
20.8

TECHNOLOGY

Primary Function
Engine Start

Battery Technology
Flooded

Grid Type (pos/neg)
Expanded/Concasted

Grid Alloy (pos/neg)
Ca/Ca

Separator
PE

Electrolyte (g/cm3)
1,28

BOX DESIGN

Box Type
D31

Cover Type
SMF

Colour
Black

Layout
0

BHD
B01

Terminal
1

DRAWING

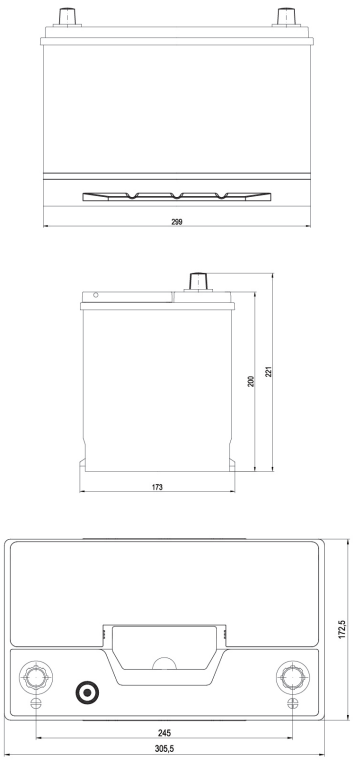

BHD

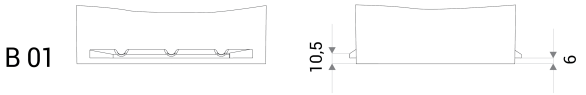

LAYOUT

0

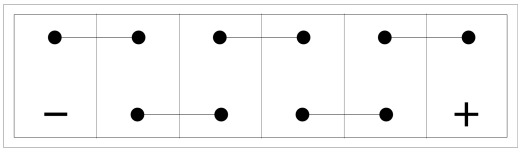

TERMINAL

1

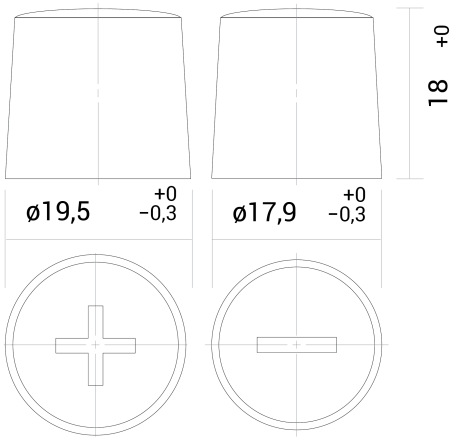

TECHNICAL DATASHEET

TOPLA TOP JIS TT95J

TAB d.d, Polena 6, SI-2392 Mežica, Slovenia, www.tab.si